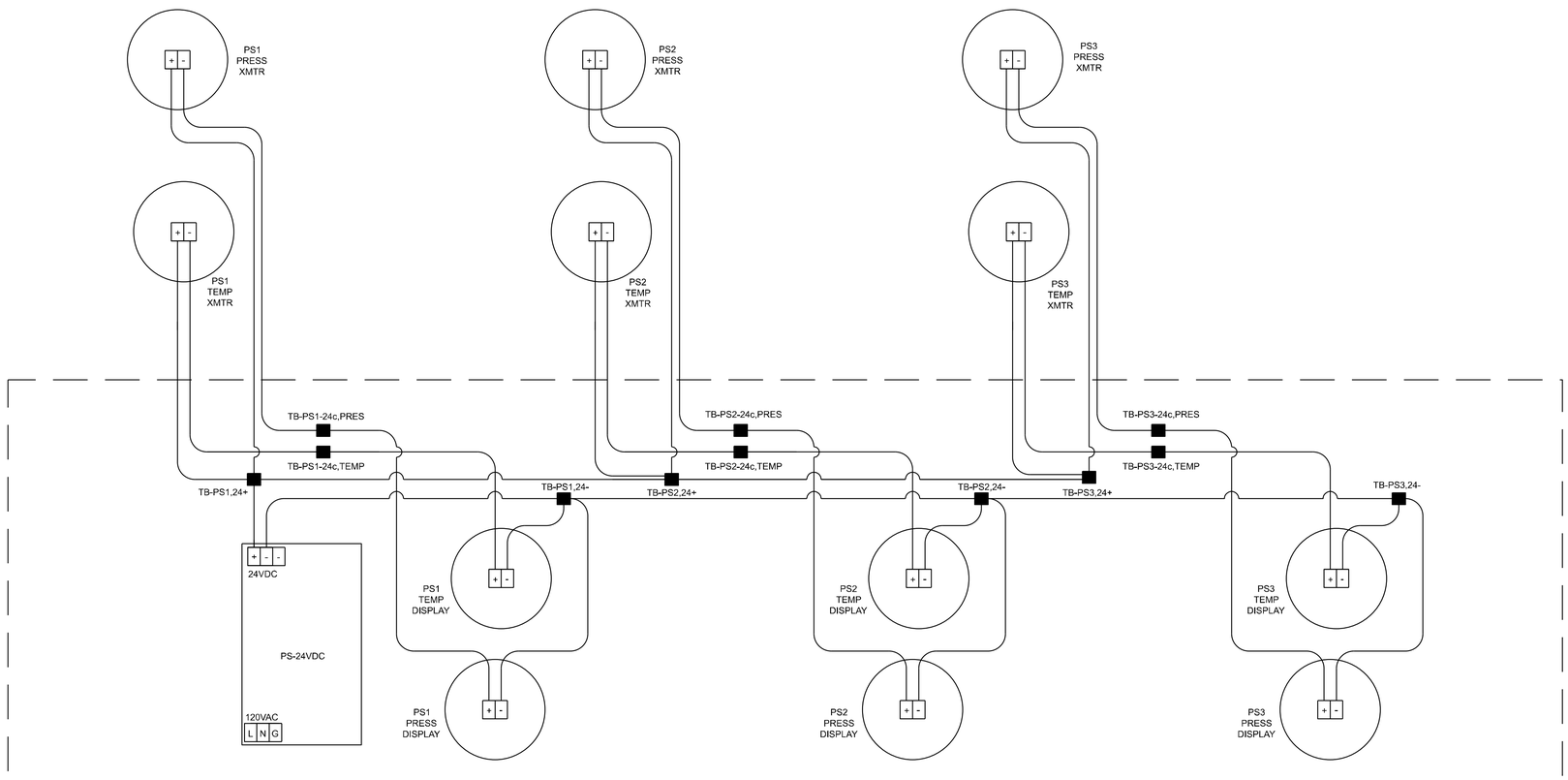

NEW CONTROL PANEL

NOTE: THERE ARE 3 ROTO-CLONES, EACH DESIGNATED AS PS1 (60HP), PS2 (60HP) AND PS3 (30 HP).
ALL TERMINAL BLOCK DESIGNATIONS HAVE PS1, PS2, OR PS3 PREFIX (NOT SHOWN)

FOR CONSTRUCTION

DESCRIPTION		
REVISION OR ISSUE PURPOSE		
REV	REV DATE	REV COMMENT
0	11/21/2024	ISSUE FOR CONSTRUCTION

DRAFTER
TONG ROLLINS (Affiliate) — Digitally signed by TONG ROLLINS (Affiliate) Date: 2024.11.20 14:40:02 -06'00'

DRAFTING CHECKER

DESIGN ENGINEER
THOMAS WHITE (Affiliate) — Digitally signed by THOMAS WHITE (Affiliate) Date: 2024.11.20 15:01:17 -06'00'

DVR / DESIGN CHECKER
GLEN OLINGER (Affiliate) — Digitally signed by GLEN OLINGER (Affiliate) Date: 2024.11.21 10:03:27 -06'00'

DISCIPLINE MANAGER / FACILITY ENGINEERING MANAGER
GLEN OLINGER (Affiliate) — Digitally signed by GLEN OLINGER (Affiliate) Date: 2024.11.21 10:04:59 -06'00'

PROJECT ENGINEER

SYSTEM ENGINEER

REV.	DATE

PE STAMP

USERS MUST REFER TO THE TRANSMITTAL DOCUMENTS THAT ACCOMPANIED DELIVERY OF THIS DRAWING FOR ANY APPLICABLE DISCLAIMERS GOVERNING THE DRAWING.

This document has been reviewed by a DC/RO and has been determined to be UNCLASSIFIED, not UCNI, and contains no CUI based on current classification guidance. This review does not constitute a review for CUI outside of classification guidance and does not constitute clearance for Public Release.

Name: Thomas White

Date: 11/21/2024

Pantex eDC/RO ID: 878666

Managed and operated by PanTexas Deterrence, LLC
for the Department of Energy under
U.S. Government contract 89233224CNA000004
Amarillo, Texas

11-055

ROTO-CLONE
DIFFERENTIAL PRESSURE & WATER TEMPERATURE TRANSMITTERS WIRING DIAGRAM

BLDG			SYSTEM	SHEET NO.	
11-055			ELECTRICAL	E0087	
SH.	OF	TYPE	DRAWING NUMBER	PART	REV
004	006	DD	E11055-F-0087	000	0

Pantex_D_(Dec16).dgn

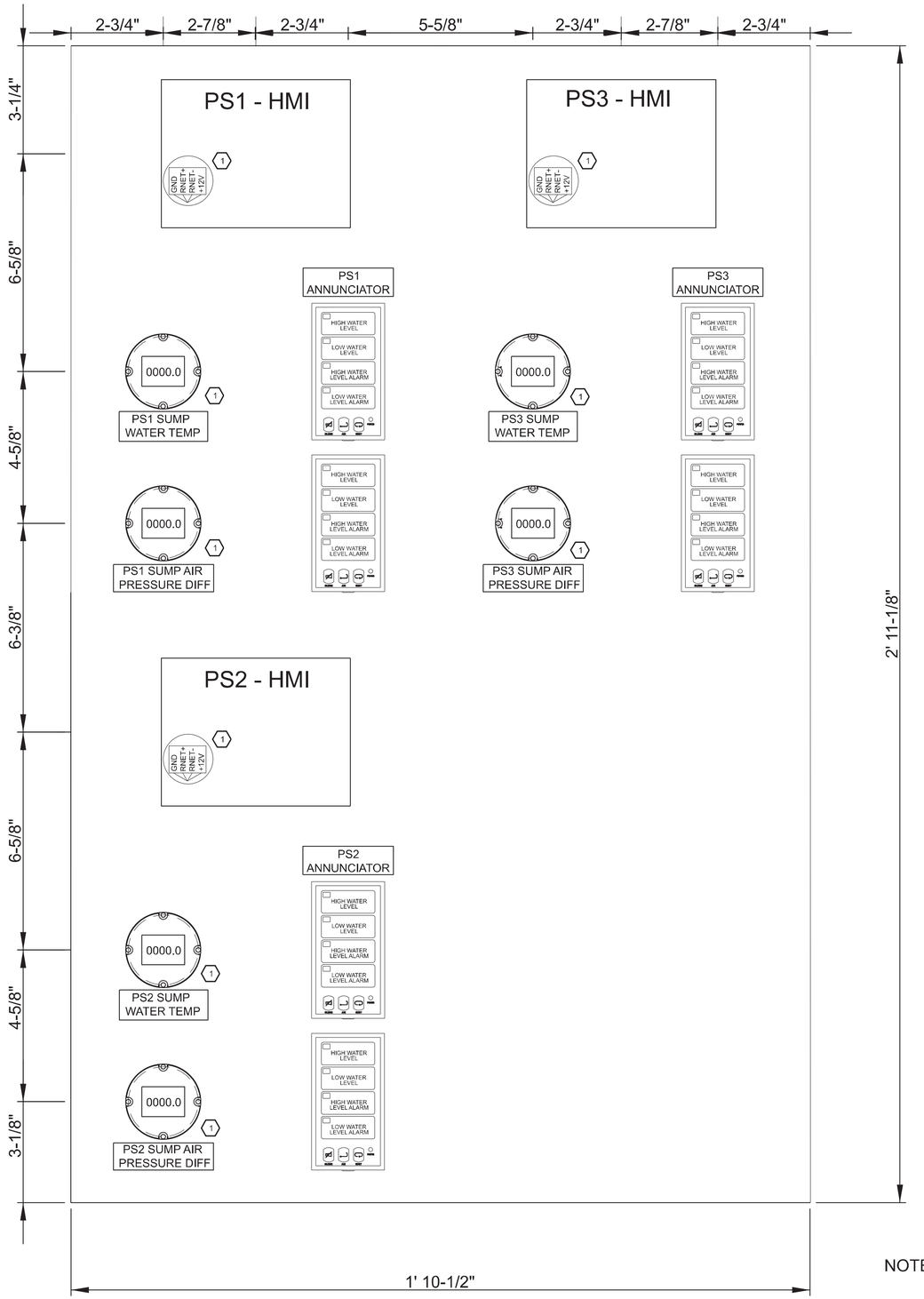

CONTROL PANEL BILL OF MATERIALS

ITEM	PRODUCT DESCRIPTION	MANUFACTURER	CATALOG NUMBER	QTY.
1	CONTROL PANEL NEMA 12 HINGED 24W"X36T"X10D"	HOFFMAN	A362410LP	1
2	CONTROL PANEL BACK PLATE	HOFFMAN	A36P24	1
3	SUMP WATER TEMP XMTR 4-20MA LOOP CLASS 1 DIV 1 1/2" PROCESS AND CONDUIT 6" PROBE LENGTH	DWYER	TTE-106-W-LCD	3
4	SUMP DIFF PRESSURE XMTR 4-20MA LOOP CLASS 1 DIV 1 1/2" PROCESS AND CONDUIT	DWYER	3100D-3-FM-1-1	3
5	4-20 MA DISPLAY CONTROL UNIT WITH 2 ALARM POINTS 12-36VDC POWERED PANEL MOUNTED INDOOR RATED (FOR SUMP WATER TEMP AND DIFF AIR PRESSURE)	OMEGA	TX03	6
6	4 CHANNEL ALARM ANNUNCIATOR 12-36VDC POWERED PANEL MOUNTED INDOOR RATED (FOR HIGH/LOW SUMP WATER LEVEL ALARMS	DWYER	AN24-2	6
7	DIN RAIL MOUNTING TRACK 35MM 1M	SCHNEIDER	16-700DIN	1
8	120V TO 24VDC CONVERTER DIN RAIL MT 5A	SIEMENS	6EP1332-5BA10	1
9	RELAY BASE, OCTAL	SCHNEIDER	8501NR52	15
10	RELAY, 120VAC, 10A, DPDT	SCHNEIDER	8501KPR12P14V20	6
11	SINGLE FUNCTION TIME DELAY RELAY 120V 10A ON DELAY, DPDT	SCHNEIDER	9050JCK60V20	9
12	TERMINAL BLOCKS, 4mm, 30A	SCHNEIDER	NSYTRV42	100
13	GROUNDING TERMINAL BLOCKS, 4mm	SCHNEIDER	NSYTRV42PE	10
14	FUSE TERMINAL BLOCKS WITH FEED THROUGH, 4MM, GRAY	SCHNEIDER	NSYTRV42	12
15	THERMAL-MAGNETIC CIRCUIT PROTECTOR, 120V, 12A	SCHNEIDER	GB2CB20	2
16	TERMINAL BLOCKS, END STOP, GRAY	SCHNEIDER	NSYTRAAB35	10
17	TERMINAL BLOCK PARTITION PLATE	SCHNEIDER	NSYTRAC22	10
18	TERMINAL BLOCK PLUG IN BRIDGE, 10 WAY, BLUE	SCHNEIDER	NSYTRAL410B (10 PIECES)	1
19	FUSE, 5X20MM, 2A	BUSSMAN	BK-GMA-2-R	10
20	MAU CONTROL HMI UNIT (SHIPPED WITH MAU UNIT)	GFE		3
21	PHENOLIC LABELS	-	-	-

KEYED NOTES

1. CUT HOLE THROUGH PANEL FRONT COVER TO LINE UP WITH CONNECTIONS IN SURFACE MOUNT DEVICES, TO ALLOW WIRING CONNECTION TO DEVICE FROM INSIDE PANEL.

FOR CONSTRUCTION

NOTE: THERE ARE 3 ROTO-CLONES, EACH DESIGNATED AS PS1 (60HP), PS2 (60HP) AND PS3 (30 HP). ALL TERMINAL BLOCK DESIGNATIONS HAVE PS1, PS2, OR PS3 PREFIX (NOT SHOWN)

DESCRIPTION		
REVISION OR ISSUE PURPOSE		
REV	REV DATE	REV COMMENT

DRAFTER
TONG ROLLINS (Affiliate) — Digitally signed by TONG ROLLINS (Affiliate) Date: 2024.11.20 14:42:20 -06'00'

DRAFTING CHECKER

DESIGN ENGINEER
THOMAS WHITE (Affiliate) — Digitally signed by THOMAS WHITE (Affiliate) Date: 2024.11.20 15:02:10 -06'00'

DVR / DESIGN CHECKER
GLEN OLINGER (Affiliate) — Digitally signed by GLEN OLINGER (Affiliate) Date: 2024.11.21 10:05:42 -06'00'

DISCIPLINE MANAGER / FACILITY ENGINEERING MANAGER
GLEN OLINGER (Affiliate) — Digitally signed by GLEN OLINGER (Affiliate) Date: 2024.11.21 10:06:17 -06'00'

PROJECT ENGINEER

SYSTEM ENGINEER

REV. | DATE

PE STAMP

USERS MUST REFER TO THE TRANSMITTAL DOCUMENTS THAT ACCOMPANIED DELIVERY OF THIS DRAWING FOR ANY APPLICABLE DISCLAIMERS GOVERNING THE DRAWING.

This document has been reviewed by a DC/RO and has been determined to be UNCLASSIFIED, not UCNI, and contains no CUI based on current classification guidance. This review does not constitute a review for CUI outside of classification guidance and does not constitute clearance for Public Release.
Name: Juan Dicuru
Date: 11/22/2024
Pantex eDC/RO ID: 878916

BURNS & McDONNELL
9400 WARD PARKWAY
KANSAS CITY, MO 64114
(816) 333-9400

PanTeXas
Managed and operated by PanTeXas Deterrence, LLC
for the Department of Energy under
U.S. Government contract 89233224CNA000004
Amarillo, Texas

11-055

ROTO-CLONE
CONTROL PANEL FRONT LAYOUT

BLDG			SYSTEM	SHEET NO.	
11-055			ELECTRICAL	E0088	
SH.	OF	TYPE	DRAWING NUMBER	PART	REV
005	006	DD	E11055-F-0088	000	0

Pantex_D_(Dec16).dgn

UNCLASSIFIED

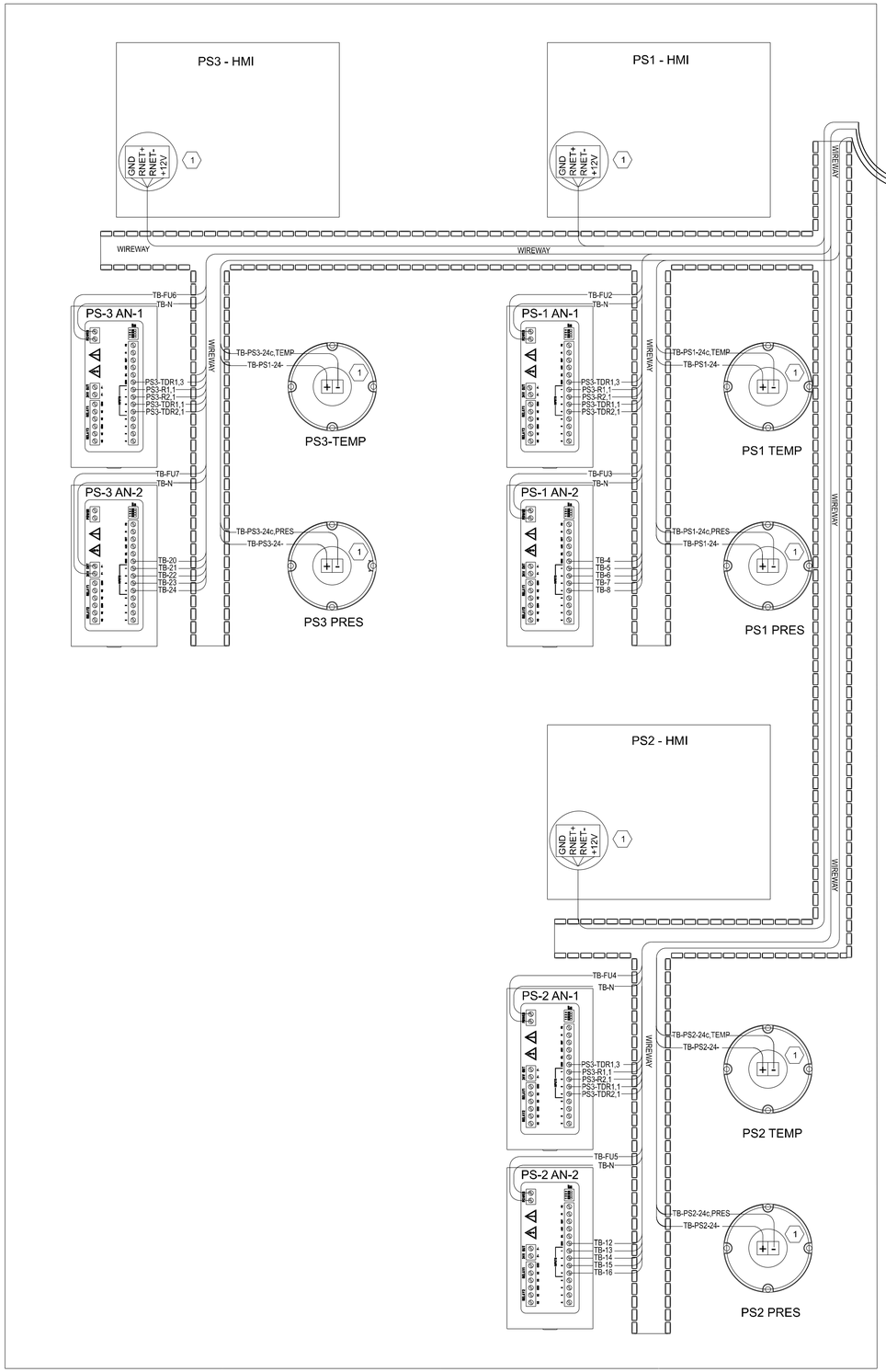

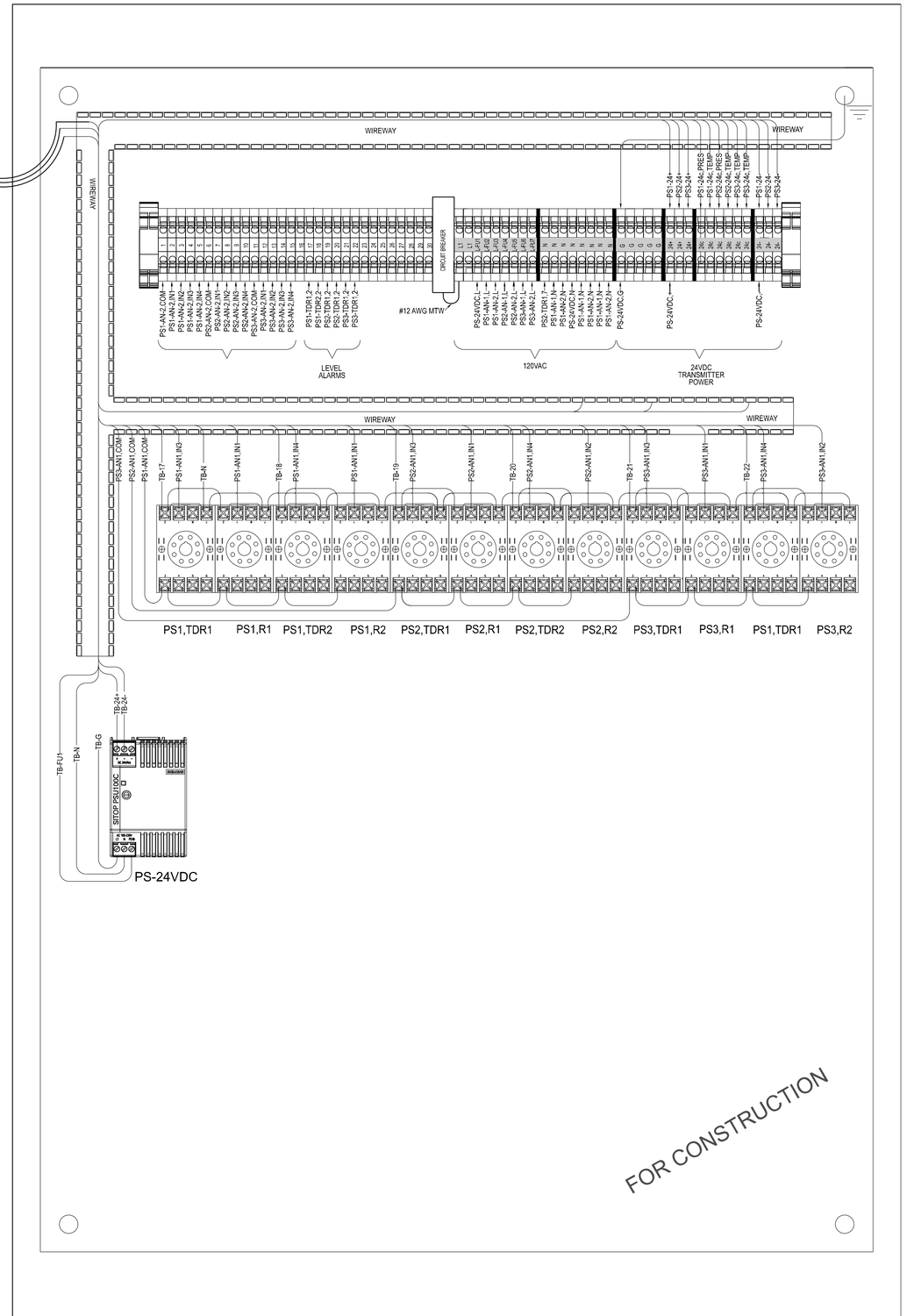

DESCRIPTION		
REVISION OR ISSUE PURPOSE		
REV	REV DATE	REV COMMENT
0	11/21/2024	ISSUE FOR CONSTRUCTION

DRAFTER
TONG ROLLINS (Affiliate) Digitally signed by TONG ROLLINS (Affiliate) Date: 2024.11.20 14:43:28 -06'00'

DRAFTING CHECKER

DESIGN ENGINEER
THOMAS WHITE (Affiliate) Digitally signed by THOMAS WHITE (Affiliate) Date: 2024.11.20 14:57:34 -06'00'

DVR / DESIGN CHECKER
GLEN OLINGER (Affiliate) Digitally signed by GLEN OLINGER (Affiliate) Date: 2024.11.21 10:09:08 -06'00'

DISCIPLINE MANAGER / FACILITY ENGINEERING MANAGER
GLEN OLINGER (Affiliate) Digitally signed by GLEN OLINGER (Affiliate) Date: 2024.11.21 10:09:33 -06'00'

PROJECT ENGINEER

SYSTEM ENGINEER

REV.	DATE

PE STAMP

USERS MUST REFER TO THE TRANSMITTAL DOCUMENTS THAT ACCOMPANIED DELIVERY OF THIS DRAWING FOR ANY APPLICABLE DISCLAIMERS GOVERNING THE DRAWING.

This document has been reviewed by a DC/RO and has been determined to be UNCLASSIFIED, not UCNI, and contains no CUI based on current classification guidance. This review does not constitute a review for CUI outside of classification guidance and does not constitute clearance for Public Release.

Name: Thomas White

Date: 11/21/2024

Pantex eDC/RO ID: 878668

PanTEX

Managed and operated by PanTeXas Deterrence, LLC
for the Department of Energy under
U.S. Government contract 89233224CNA000004
Amarillo, Texas

11-055

ROTO-CLONE
WIRING DETAILS
SHEET 6

BLDG			SYSTEM	SHEET NO.	
11-055			ELECTRICAL	E0089	
SH.	OF	TYPE	DRAWING NUMBER	PART	REV
006	006	DD	E11055-F-0089	000	0

Pantex_D_(Dec16).dgn

UNCLASSIFIED