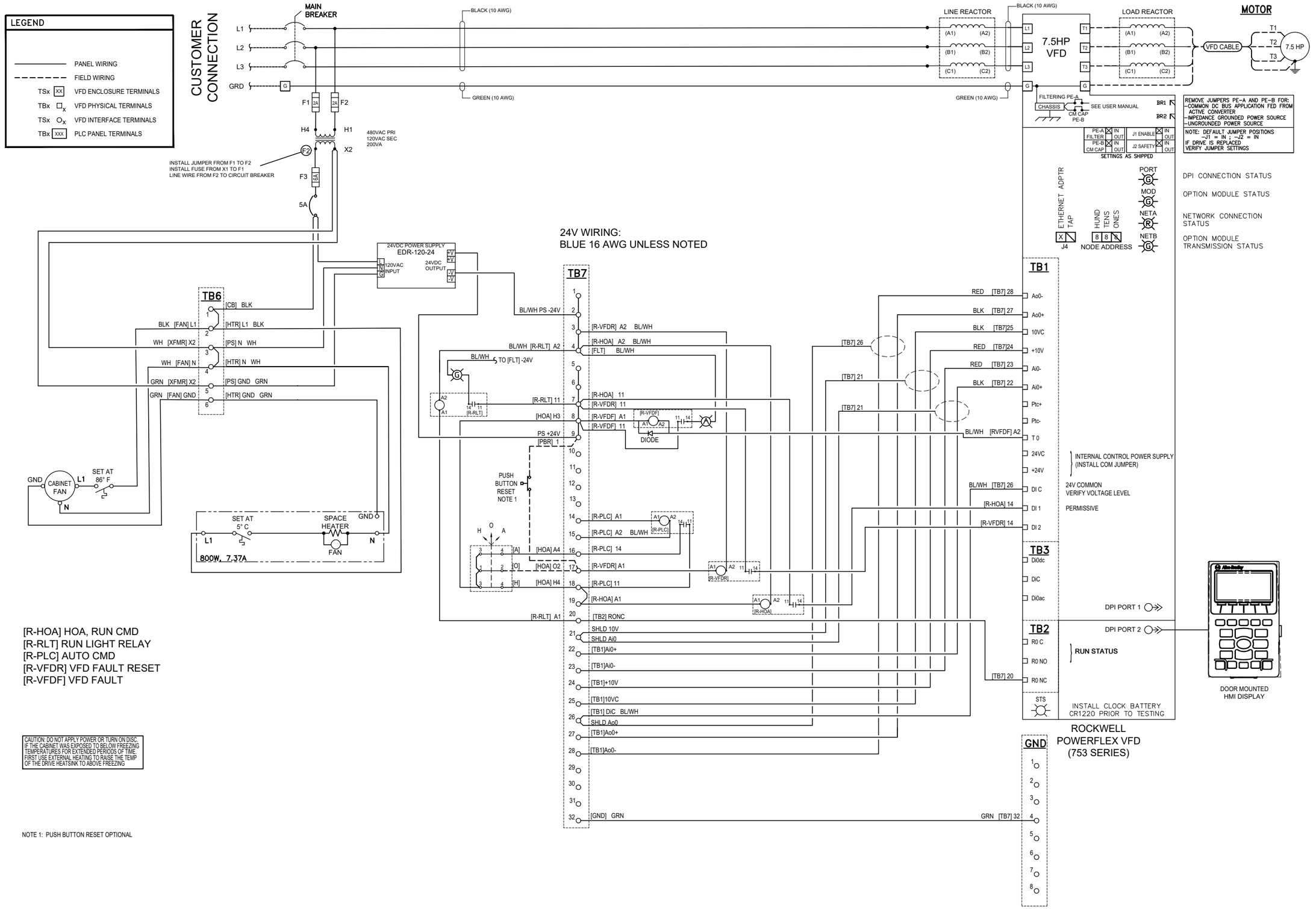


| REVISION/ISSUE | | |