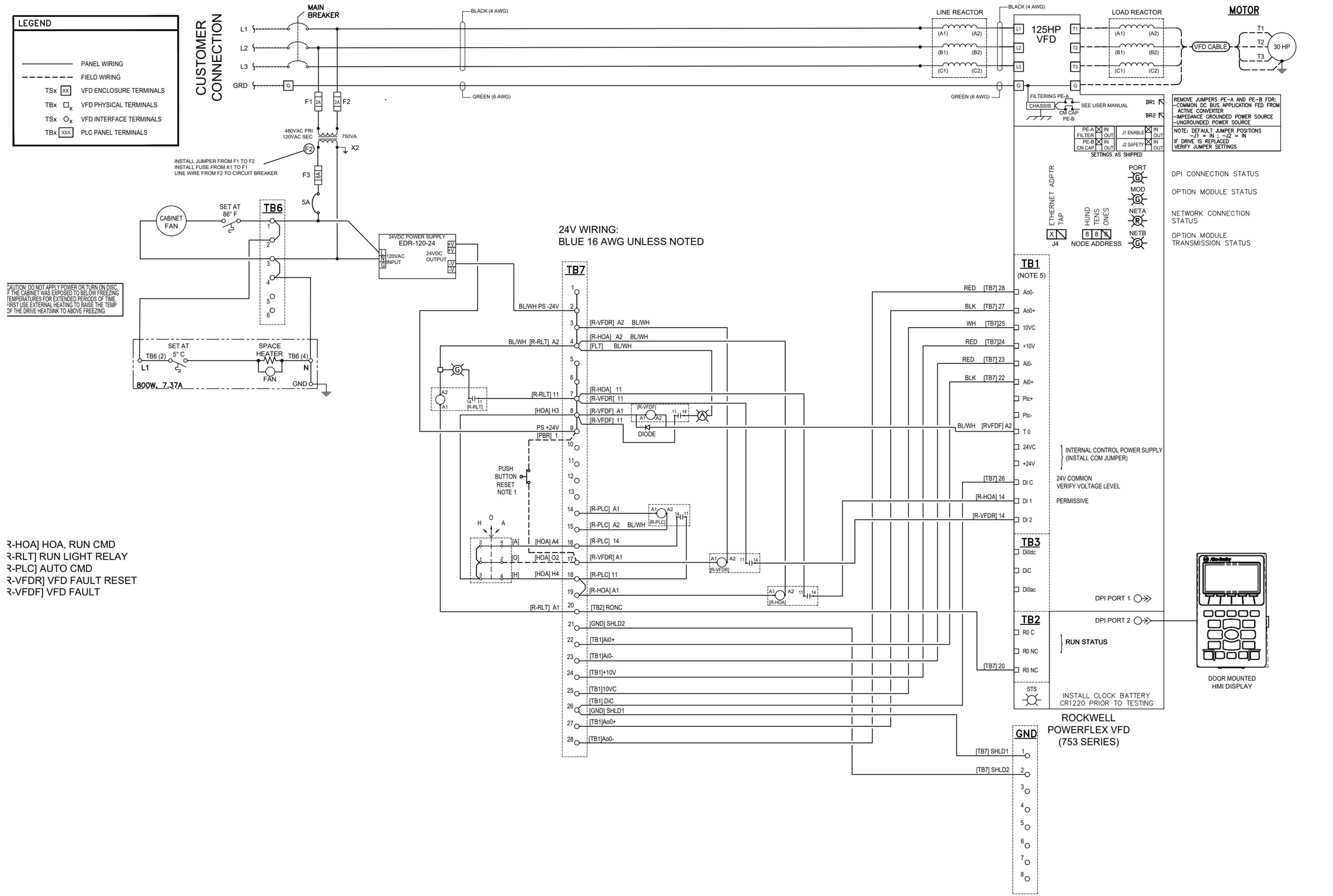

NO.	REVISION/ISSUE	DATE	APPR.	CHK.	REVIEW	DRAWN BY:	FILE:	JOB NO.	SCALE	REV	DWG.
A	FOR APPROVAL	03/21/24	BJT	JG	BY				NO SCALE	A	xxxxx-xx-xx

REFERENCE DRAWINGS

DWG. NO. A-24-10002 125HP VFD

ENGINEERING AND DESIGN TEXAS REGISTERED ENGINEERING FIRM 4098

CONSULTANTS INC.

MIDLAND, TEXAS